SQFLAT LED 1.0

Advantages

- Quick and easy installation
- Low UGR coefficients

IP20

SQFLAT LED 1.0 1

	P	1m	K	Ra	IP		KG
SQF1ST.10.019.8A4000	19	2550	4000K	>80	IP20	90°X90°	2,1kg

SQFLAT LED 1.0 2

	P	1m	K	Ra	IP		KG
SQF1ST.20.023.8A4000	23	3100	4000K	>80	IP20	90°X90°	2,1kg

To determine the exact light parameters for the selected beam angle, you need to use the photometric files for the specified beam angle.
Download link: LDT-LUXON-LED.zip

SQFLAT LED 1.0 3

	P	1m	K	Ra	IP		KG
SQF1ST.30.027.8A4000	27	3600	4000K	>80	IP20	90°X90°	2,1kg

SQFLAT LED 1.0 4

	P	1m	K	Ra	IP		KG
SQF1ST.40.032.8A4000	32	4200	4000K	>80	IP20	90°X90°	2,1kg

SQFLAT LED 1.0 5

	P	1m	K	Ra	IP		KG
SQF1ST.50.036.8A4000	36	4650	4000K	>80	IP20	90°X90°	2,1kg

To determine the exact light parameters for the selected beam angle, you need to use the photometric files for the specified beam angle.
Download link: LDT-LUXON-LED.zip

SQFLAT LED 1.0 6

	P	lm	K	Ra	IP		KG
SQF1ST.60.042.8A4000	42	5350	4000K	>80	IP20	90°X90°	2,1kg

SQFLAT LED 1.0 7

	P	lm	K	Ra	IP		KG
SQF1ST.70.048.8A4000	48	5950	4000K	>80	IP20	90°X90°	2,1kg

To determine the exact light parameters for the selected beam angle, you need to use the photometric files for the specified beam angle.
Download link: LDT-LUXON-LED.zip

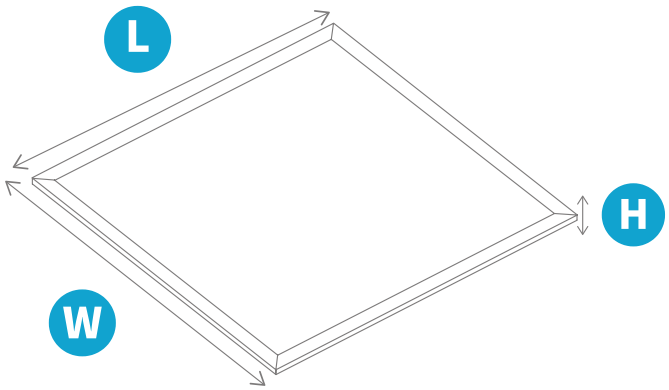

	H	W	L
SQF1ST.2	10	595	595
SQF1ST.3	10	595	595
SQF1ST.4	10	595	595
SQF1ST.5	10	595	595
SQF1ST.6	10	595	595
SQF1ST.7	10	595	595
SQF1ST.1	10	595	595

SQF1ST.2	2,4	64	120x80
SQF1ST.3	2,4	64	120x80
SQF1ST.4	2,4	64	120x80
SQF1ST.5	2,4	64	120x80
SQF1ST.6	2,4	64	120x80
SQF1ST.7	2,4	64	120x80
SQF1ST.1	2,4	64	120x80

To determine the exact light parameters for the selected beam angle, you need to use the photometric files for the specified beam angle.
Download link: LDT-LUXON-LED.zip

Montage



Surface mounting

Recessed-mounted

Modular ceiling

Suspended

Luminous flux

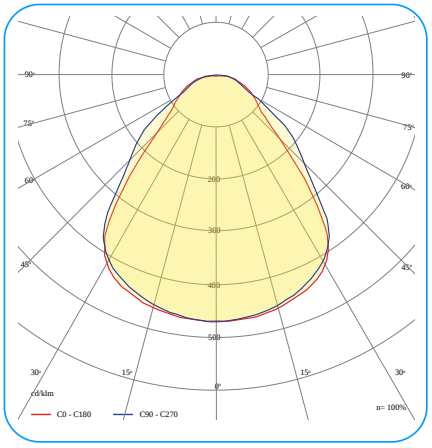

90°X90°

To determine the exact light parameters for the selected beam angle, you need to use the photometric files for the specified beam angle.
Download link: LDT-LUXON-LED.zip

Available configurations

Family	Power version	Version	Power [W]	CRI	Type of diode	CCT [K]	Lens material	Diffuser material	Beam angle	Control	Operating temperature	Warranty	Modifications
SQF1ST SQFLAT LED 1.0	1 1	0 Standard	019 19W	8 >80	A Mid Power	4000 4000K	0 No lens	P34 PS diffuser Microprismatic	090090 90°x90°	00 On/Off	2040 -20°C÷40°C	05Y 5 Years	0000 No modification
	2 2		023 23W							D0 DALI			
	3 3		027 27W										
	4 4		032 32W										
	5 5		036 36W										
	6 6		042 42W										
	7 7		048 48W										

Example product code

SQF1ST.20.023.8A4000.0P34.090090.00.2040.05Y.0000

To determine the exact light parameters for the selected beam angle, you need to use the photometric files for the specified beam angle.
Download link: LDT-LUXON-LED.zip